MAGNETIC
Normal Power Factor

CC1420

Ballast Type:	Electromagnetic	Starting Method:	Preheat	Unit Weight:	0.61 lb
Input Voltage:	120VAC+5%,-10%	Lamp Connection:	Series	Carton Quantity:	50
Input Frequency:	60 Hz.	Unit Color:	White	Skid Quantity:	4000

ELECTRICAL SPECIFICATION:

Line Voltage (V)	Lamp Type	Lamp Watts	No. of Lamps	Line Current (A)	Input Power (W)	Power Factor	Max Current THD (%)	Current Crest Factor	Ballast Factor	Wiring Diagram	B.E.F.
120	F14T8	14	1	0.31	18	≥0.48	≤10	≤1.6	0.84	001	4.67
120	F15T8	15	1	0.28	18	≥0.52	≤10	≤1.6	0.82	001	4.56
120	F14T12	14	1	0.32	19	≥0.48	≤10	≤1.6	0.85	001	4.47
120	F15T12	15	1	0.31	18	≥0.48	≤10	≤1.6	0.95	001	5.28
120	F20T12	20	1	0.26	18	≥0.59	≤10	≤1.6	0.69	001	3.83

PERFORMANCE:
- Electromagnetic reactor type ballast
- Preheat start
- Series operation
- Normal power factor
- Clamped core and coil
- Sound rated A
- Meets ANSI C82.1

APPLICATION:
- Maximum case temperature: 194ºF/90ºC
- Maximum ambient temperature: 104ºF/40ºC
- Minimum starting temperature: 50ºF/10ºC
- Remote mounting: 10ft.

SAFETY:
- UL listed (Type 1 outdoor)
- CSA (cUL) certified
- CSA/C22.2 certified
- No PCB's

STYLE:

2V

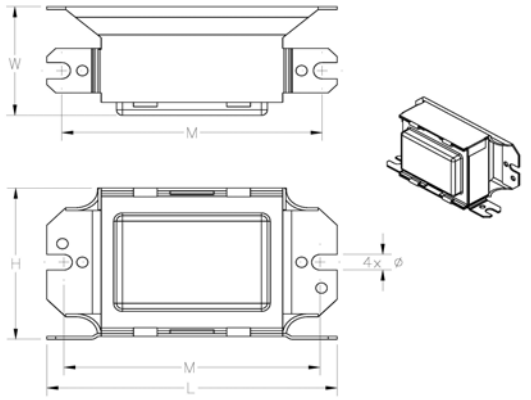

H	W	L	M	Ø
1 23/32	1 1/4	3 1/16	2 3/4	3/16
1.72	1.25	3.06	2.75	0.19
4.34 cm	3.18 cm	7.77 cm	6.99 cm	0.47 cm

WIRING DIAGRAM:

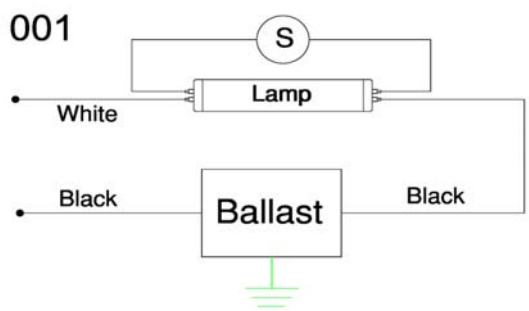

Standard lead lengths:
- Blk: 9 x 18"

* 3/8" Strip

WARRANTY

Robertson Worldwide warrants to the purchaser that this ballast will be free from defects in material or workmanship for a period of 2 years from date of manufacture when properly installed and under normal conditions of use. For more information on Robertson Worldwide's ballasts, call 1-800-323-5633 or visit www.robertsonww.com. Specifications subject to change without notice.

Revised 3/16/07

ROBERTSON WORLDWIDE
13611 Thornton Rd, Blue Island, IL 60406, TEL: 1-800-323-5633, FAX: 1-877-388-2420, www.robertsonww.com